M85049/104 Type Composite 45° Shield-Sock Adapter

RY85049 Series • M85049 Type Backshells

RY85049/104 - 15 N

1 2 3

1 **BASIC PART NUMBER**

RY85049/104

M85049/104 type

45° composite EMI/RFI shield-sock adapter

2 **SHELL SIZE**

See dimensions table below

3 **CONFIGURATION**

N Non-detented, self-locking

(Omit for detented, self-locking)

Photo for example only

RY85049/104 Compatibility

Compatible Connector Series
MIL-DTL-38999 Series III & IV EN3645

RY85049/104 Dimensions

Shell Size	D Max	V Thread Class 2B	L Max	G ±.030 (0.8)	C Max	E Min	H Max	J Min	K Max	Braid ID	B ±.031 (0.8)
09	0.858 (21.8)	M12 X 1 - 6H	1.388 (35.3)	0.375 (9.5)	0.980 (24.9)	0.229 (5.8)	0.750 (19.1)	0.264 (6.7)	0.901 (22.9)	0.375 (9.5)	0.265 (6.7)
11	0.984 (25.0)	M15 X 1 - 6H	1.428 (36.3)	0.375 (9.5)	1.050 (26.7)	0.274 (7.0)	0.875 (22.2)	0.390 (9.9)	0.964 (24.4)	0.375 (9.5)	0.310 (7.9)
13	1.157 (29.4)	M18 X 1 - 6H	1.498 (38.1)	0.406 (10.3)	1.200 (30.5)	0.354 (9.0)	1.000 (25.4)	0.504 (12.8)	1.050 (26.7)	0.500 (12.7)	0.390 (9.9)
15	1.280 (32.5)	M22 X 1 - 6H	1.548 (39.3)	0.406 (10.3)	1.300 (33.0)	0.470 (11.9)	1.125 (31.8)	0.630 (16.0)	1.112 (28.2)	0.500 (12.7)	0.506 (12.9)
17	1.406 (35.7)	M25 X 1 - 6H	1.648 (41.9)	0.406 (10.3)	1.440 (36.6)	0.555 (14.1)	1.250 (31.8)	0.756 (19.2)	1.175 (29.9)	0.781 (19.8)	0.591 (15.0)
19	1.516 (38.5)	M28 X 1 - 6H	1.768 (44.9)	0.406 (10.3)	1.560 (39.6)	0.625 (15.9)	1.375 (34.9)	0.843 (21.4)	1.230 (31.2)	0.781 (19.8)	0.661 (16.8)
21	1.642 (41.7)	M31 X 1 - 6H	1.808 (45.9)	0.406 (10.3)	1.690 (42.9)	0.708 (18.0)	1.500 (38.1)	0.969 (24.6)	1.293 (32.8)	1.000 (25.4)	0.744 (18.9)
23	1.768 (44.9)	M34 X 1 - 6H	1.858 (47.2)	0.406 (10.3)	1.770 (45.0)	0.790 (20.1)	1.625 (41.3)	1.091 (27.7)	1.365 (34.7)	1.000 (25.4)	0.826 (21.0)
25	1.890 (48.0)	M37 X 1 - 6H	1.898 (48.2)	0.406 (10.3)	1.890 (48.0)	0.860 (21.8)	1.750 (44.5)	1.217 (30.9)	1.417 (36.0)	1.250 (31.8)	0.896 (22.8)

Dimensions are in inches (mm).

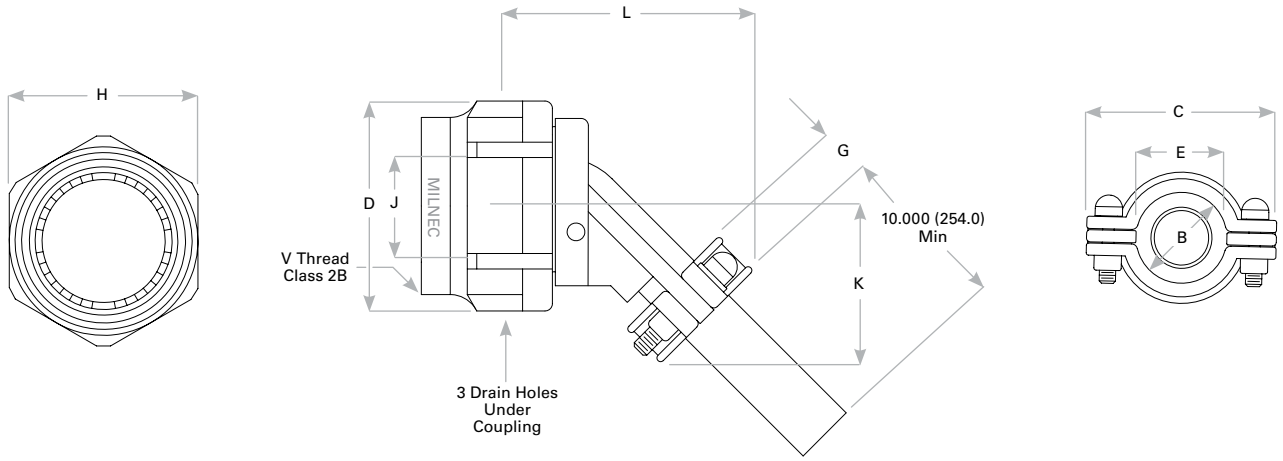

Rev. 1825

MILNEC INTERCONNECT SYSTEMS